S-Sight

This series simplifies surveillance with high-quality images and enhanced night vision capabilities. Powered by AI (DDA™ Video Analytics) and equipped with Check Point protection for comprehensive monitoring. Choose from rainbow cameras, Motorized Varifocal options, and Anti-Vandal designs for high-security areas.

PROVISION ISR
PROTECTING YOUR PRIVACY

DH-380ADSN-28

8MP Active Deterrence Fixed Lens Dome/Turret Camera with Hybrid LED and DDA1 Analytics

Active deterrence cameras are designed to deter unwanted visitors by activating visual and audio alerts. Equipped with a 2.8mm lens, this 8MP Dome/Turret camera is intended for short-distance surveillance (up to 40m) in indoor and outdoor scenarios. With its hybrid capability, the white LED will enlighten the scene when humans being detected for full color image even in dark scenarios. The camera offers outstanding DDA Analytics (Detect, Distinguish, Alert), which can perform human and vehicle recognition. With various detection rules and triggers. This model complies with NDAA demands and ensures your device is cyber-protected round the clock with the integrated Check Point Quantum IoT Nano agent that provides an advanced threat prevention layer against the common attack vectors at runtime. With its outstanding performance, reliability, and affordable price, the DH-380ADSN-28 camera is the perfect solution for any simple IP installation.

S-SIGHT IP

CHECK POINT EMBEDDED

8 MP

40m IR — IR View 0 Lux
40m — White LED
PoE
WDR — True
Built In Mic
IP66 — Protection rating

DDA1 ANALYTICS
Hybrid
Active deterrence
NDAA
FIXED LENS
ONVIF MTSG

MAIN FEATURES

- DH-380ADSN-28 8MP Active Deterrence Fixed Lens Dome/Turret Camera with Hybrid LED and DDA1 Analytics
- Sensor: 1/2.8" CMOS (16:9)
- Resolution: 3840×2160 20FPS (8MP)
- Lens: 2.8mm (103°) ICR + 24/7 Full-Color Day Mode
- Illumination: 40m (1 High-Power IR LED) + 40m (1 High-Power White LEDs) + Red/Blue Strobe Lights
- Compression: H.265+/ H.264+ / H.265 / H.264 / MJPEG
- Quantum IoT Nano agent by Check Point™
- General Analytics: Item Monitoring, Camera Tampering
- Human & Vehicle Recogition: Sterile Area, Line Crossing
- True WDR (120dB), BLC, HLC, ROI
- SD Card: Event/Schedule Record (Up to 256GB)
- Built-in Microphone and Speaker + Audio Input / Output
- ONVIF: Profile M/T/S/G
- Water Proof: IP66
- Weight: ~740g
- Power: DC12V/~900mA / PoE/~12W

DH-380ADSN-28

PROVISION ISR
PROTECTING YOUR PRIVACY

SPECIFICATIONS

3rd Party Cyber Protection	
General	Quantum IoT Nano agent by Check Point™
Protection Methods	Shell injection protection, File Monitor, Import-Table Protection, Dynamic-Memory Protection

NDAA Compliant	
NDAA Compliant	Yes

Video	
Image Sensor	1/2.8" CMOS (16:9)
Effective Pixels	3840x2160
Electronic Shutter	1/3s ~ 1/100000s
Day & Night	ICR + 24/7 Full-Color Day Mode
Min. Illumination	Day: 0.01lux (@F1.6, AGC on) 0lux with IR on

Audio	
Audio compression	G.711A/G.711U
Communication	Two-Way Audio

Image	
Image Settings	AWB, AGC Adjustable, Exposure Mode (Auto) Sharpness, Saturation, Brightness & Contrast Adjustable
Image Enhancement	True WDR (120dB), BLC, HLC, ROI
Noise Reduction	3D-DNR
Image Orientation	Mirror/Flip, Corridor Mode
Privacy Zone	Yes

Events and Analytics	
Analytics	General Analytics: Item Monitoring, Camera Tampering Human & Vehicle Recogition: Sterile Area, Line Crossing
Motion Detection	Yes

Compression

DH-380ADSN-28

Resolution	8MP / 4K / 6MP / 5MP / 4MP / 2MP / 1MP / D1 / QVGA / CIF
Frame Rate	1-20FPS
Video Compression	H.265+/ H.264+ / H.265 / H.264 / MJPEG**
Multi-Stream	Master Stream: 8MP (3840x2160) (1~20fps) / 6MP (3200x1800) / 4MP (2688x1520) / 2MP (1~30fps) Substream: 1MP/QVGA/360p/D1/CIF (1~30fps) Third Stream: 1MP/360p/D1/CIF (1~30fps)
Bit Rate	64Kbps ~ 8Mbps@H.265 / 64Kbps ~ 12Mbps@H.264
Encode Mode	VBR/CBR
Image Quality	Five levels under VBR; Free adjustment under CBR

Lens	
Lens (Field of View)	2.8mm (103°)
Iris	Fixed Iris
Lens Mount	M12 Mount
Detect	81m(267ft)
Recognize	16m(53ft)
Identify	8m(27ft)

Network	
User Access	Supports simultaneous monitoring of up to 10 users with multi-stream real-time transmission
Network Protocol	IPv4, IPv6, TCP, UDP, DHCP, NTP, DDNS, SNMP, 802.1X, RTSP, RTMP, UPnP, Email, FTP, HTTP POST, HTTPS, QoS, Auto Report, P2P
Remote Monitoring	IE Browsing, VMS Software, Provision Cam2 Mobile App
Ethernet	100Mbps
ONVIF	Profile M/T/S/G

Connectivity	
Network	RJ45 (+PoE)
Audio Connectivity	Built-in Microphone and Speaker + Audio Input / Output

DH-380ADSN-28

Alarm	No
SD Card	Event/Schedule based Main/Substream recording (Up to 256GB)
Wiegand	N/A
Power	DC Socket
Analog Video Output	No

Housing	
PoE	Yes
Illumination	40m (1 High-Power IR LED) 40m (1 High-Power White LEDs) Red/Blue Strobe Lights
Power Supply	DC12V/~900mA / PoE/~12W
Protection Rate	Water Proof: IP66
Work Environment	-30°C~60°C, 10%~90% Humidity
Bracket	3-Axis Bracket
Dimensions	Ø113mm×99.6mm
Weight (gross)	~740g
Hard Reset Button	Yes

DH-380ADSN-28

PROVISION ISR
PROTECTING YOUR PRIVACY

DIMENSIONS

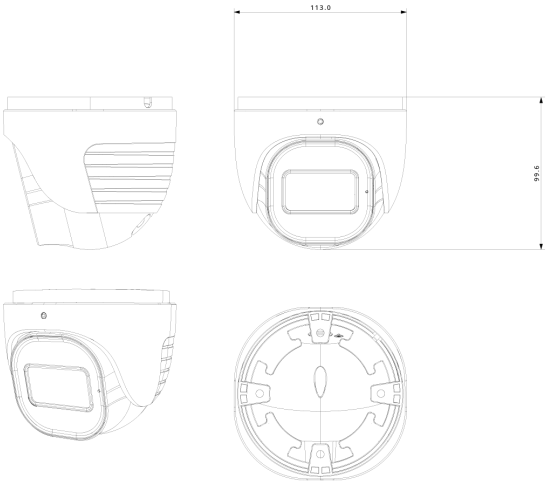
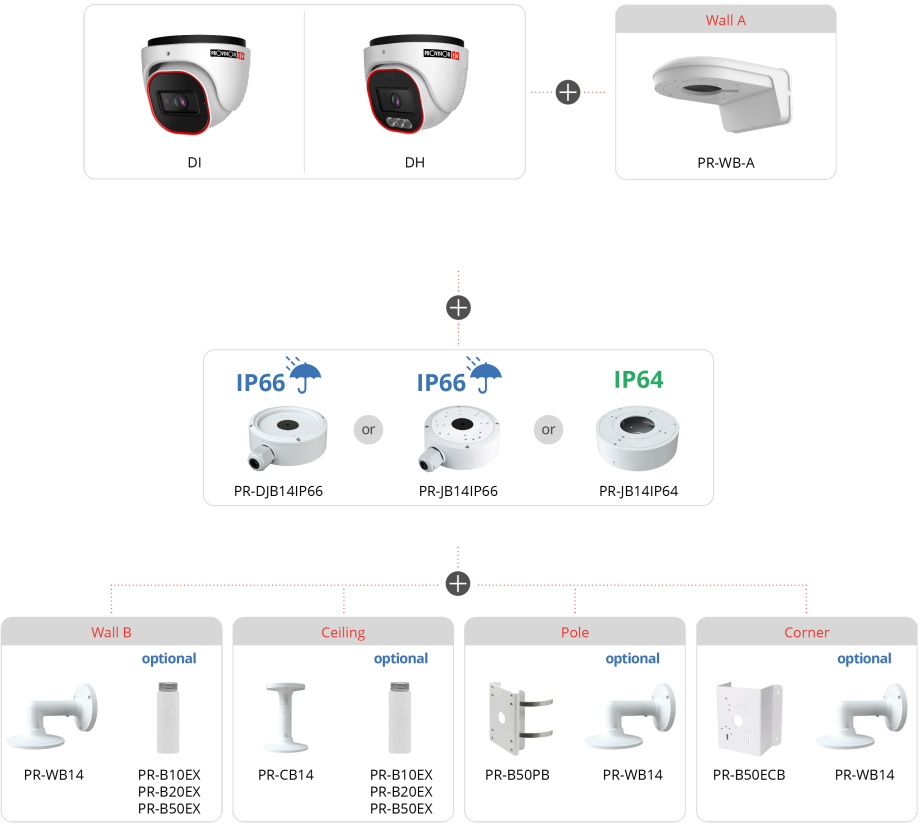
ACCESSORIES